Butterfly Valve Assemblies Selection Guide

PRODUCT DESCRIPTION

Schneider Electric's butterfly valve line offers a wide range of two- and three-way sizes, along with low pressure pneumatic spring return, electric non-spring return, and spring return actuator models that operate with on/off, floating, or proportional control signals.

All assemblies include industry leading butterfly valve features, stainless steel double "D" shafts, nylon 11 coated ductile iron disc machined to provide bubble tight shut off, minimum torque, and longer seat life. The tongue and groove resilient seat design with molded in O-ring eliminates the use of flange gaskets and allows for ease of maintenance or replacement of the resilient seat. These features provide years of optimum performance and reliability.

APPLICATIONS

Typical applications include data centers, cooling towers, central system shutoff and bypass piping control, thermal storage, and chiller and boiler control.

PRODUCT AT A GLANCE

- 2 to 18" two-way assemblies and 2 to 16" three-way assemblies
- Chilled/hot water/glycol applications
- EPDM resilient seats with tongue and groove design and build in O-ring seal
- Stainless steel double D stem, requires no pins or screws to connect the disc and stem
- Extended neck design for temperature isolation and ease of insulation installation
- Nylon 11 coated ductile iron disc
- Wide choice of pneumatic and electric actuators and control signals
- Cast iron lug bodies mate with ANSI class 125/150 flanges
- Bubble tight shut off
- Bidirectional Flow
- Series S70 NEMA 4 actuators available in 24 or 120 Vac

Schneider Electric

PART NUMBERING SYSTEM – RUBBER LINED

V x x x – 6 x x x – x x x x – x – x x

Control Signal Type
A = 2-Position
B = Body only
F = Floating (SPDT, center off)
K = Pneumatic
S = Proprotional (Vdc, mAdc)

Disc
F = Full 175 psi close to 12"
U = Undercut 50 psi close

Accessory
4 = Positive positioner
S = Auxilary switch

Leave the digit blank for no accessories

Type
6 = Butterfly

Style
2 = 2-Way
3 = 3-Way

Power Loss Action
0 = NSR
1 = NO
2 = NC

Actuator Code
See Table 1

If actuator code is only three digits, leave the fourth digit blank.

Body Style
L = Nylon disc and lug body
M = AlumBronze Disc*
SS = Stainless Steel Disc*
*Note: (Consult Factory)

Port Code
11 = 2”
12 = 2.5”
13 = 3”
14 = 4”
15 = 5”
16 = 6”
17 = 8”
18 = 10”
19 = 12”
20 = 14“
21 = 16”
22 = 18”
*Note:
Larger Sizes
(Consult Factory)

Flow Pattern[c]

Pattern	Main Valve[a]	Main Valve Position[d]	Linked Valve
0 = 2-Way	–	–	–
1 = 3-Way[b]	A	NC	C
2 = 3-Way[b]	B	NC	C
7 = 3-Way[b]	B	NO	C
8 = 3-Way[b]	A	NO	C
9 = Special	–	–	–

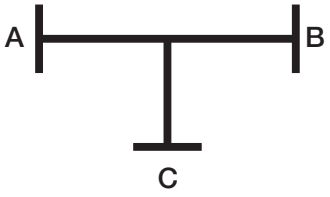

a. The letter indicates the main valve and where the actuator is mounted.
b. Refer to the flow diagram to the right.
c. The view represented is looking down on the stem side of the valve.
d. Spring return models position on loss of power

Table 1: Actuator Codes and Part Numbers[a]

Refer to the part numbering system illustration on the previous page.

Actuator Code[b]	On/Off or Floating SR	Actuator Code[b]	Modulating (2 to 10 Vdc, 4 to 20mA) SR with the addition of a 500 ohm resistor
556	MA41-7153 (VAx) (On/Off)	556	MS41-7153 (VSx)
556D	2 MA41-7153 (VAx) (On/Off)	556D	2 MS41-7153 (VSx) (Modulating)
556	MF41-7153 (VFx) (Floating)	–	–
556D	2 MF41-7153 (VFx) (Floating)		
Actuator Code[b]	**On/Off or Floating SR with Two SPDT Auxiliary Switches**	**Actuator Code[b]**	**Modulating (2 to 10 Vdc, 4 to 20 mA) SR with the addition of a 500 ohm resistor with Two Auxiliary Switches**
556	1 MA41-7153-502 (VAxS) (On/Off)	556	MS41-7153-502 (VSxS) (Modulated)
556D	1 MA41-7153 & 1 MA41-7153-502 (VAxS) (On/Off)	556D	1 MS41-7153 & 1 MS41-7153-502 (VSxS) (Modulated)
556	1 MF41-7153-502 (VFxS) (Floating)	–	–
556D	1 MF41-7153 & 1 MF41-7153-502 (VFxS) (Floating)		
Actuator Code[b]	**On/Off or Floating NSR**	**Actuator Code[b]**	**Modulating (0 to 10 Vdc, 4 to 20 mA) NSR**
E24	NR-2216-521 (VFx)	E24	NR-2216-541 (VSx)
E25	NR-2224-521 (VFx)	E25	NR-2224-541 (VSx)
E25D	2 NR-2224-521 (VFx)	E25D	2 NR-2224-541 (VSx)
Actuator Code[b]	**On/Off or Floating NSR with Two SPDT Auxiliary Switches**	**Actuator Code[b]**	**Modulating (0 to 10 Vdc, 4 to 20 mA) NSR with Two SPDT Auxiliary Switches**
E24	NR-2216-522 (VFxS)	E24	NR-2216-542 (VSxS)
E25	NR-2224-522 (VFxS)	E25	NR-2224-542 (VSxS)
E25D	1 NR-2224-521 & 1 NR-2224-522 (VFxS)	E25D	1 NR-2224-541 & 1 NR-2224-542 (VSxS)
Actuator Code	**On/Off or Floating NSR with One SPDT Auxiliary Switch**	**Actuator Code**	**Modulating (0 to 10 Vdc) NSR with One SPDT Auxiliary Switch**
907	MP-9810-129 (VAxS)	909	MP-9810-129 with CP-8391-456 (VSxS)
Actuator Code[c]	**On/Off NSR with Two SPDT Auxiliary Switches and Heater**	**Actuator Code[c]**	**Modulating (0 to 10 Vdc, 4 to 20 mA) NSR with Two SPDT Auxiliary Switches and Heater**
E10	S70-120-0061-H (VAxS)	E12	S70-120-0061-SV (VAxS)
E20	S70-120-0121-H (VAxS)	E22	S70-120-0121-SV (VSxS)
E30	S70-120-0201-H (VAxS)	E32	S70-120-0201-SV (VSxS)
E40	S70-120-0301-H (VAxS)	E42	S70-120-0301-SV (VSxS)
E50	S70-120-0501-H (VAxS)	E52	S70-120-0501-SV (VSxS)
E60 (120 Vac only)	S70-120-0651-H (VAxS)	E62 (120 Vac only)	S70-120-0651-SV (VSxS)
Actuator Code[b]	**Pneumatic Base Model SR**	**Actuator Code[b]**	**Pneumatic Modulating (Positive Positioner) SR**
221	MK-7121 (VKx)	221	MK4-7121 (VKx4)
251	M556-51 (VKx)	251	M556-14 (VKx4)
251D	2 - M556-51(VKx)	251D	1 - M556-51 & 1- M556-14 (VKx4)

a. See Table 2 to verify the correct actuator application for the valve selected.
b. D = Dual actuators
c. For 24 Vac powered change actuator code E to F (F10 = S70-24-0061-H example)

BUTTERFLY VALVE ASSEMBLIES AND ACTUATORS

Table 2: Two-Way and Three-Way Valve Assemblies

Size	Close Off	Two-Way Butterfly Valve Assemblies[a]					Three-Way Butterfly Valve Assemblies[a]				
		Schneider Electric SmartX SR[b]	Direct Coupled NSR[c]	High Torque NSR[c]	NEMA 4 with Hand Wheel NSR[c]	20 PSI Pneu. SR[b]	Schneider Electric SmartX SR[b]	Direct Coupled NSR[c]	High Torque NSR[c]	NEMA 4 with Hand Wheel NSR[c]	20 PSI Pneu. SR[b]
2”	175	S	S	–	S	S	S	S	–	S	S
2.5”	175	S	S	–	S	S	S	S	–	S	S
3”	175	D	S	–	S	S	D	S	–	S	S
4”	50	D	S	–	–	S	D	S	–	S	–
	175	–	D	–	S	S	–	D	–	S	S
5”	50	–	S	–	S	S	–	D	–	S	S
	175	–	–	–	S	S	–	–	–	S	S
6”	50	–	D	–	–	S	–	D	–	S	S
	175	–	–	S	S	S	–	–	S	S	D
8”	50	–	–	S	S	S	–	–	S	S	D
	175	–	–	S	S	D	–	–	S	S	–
10”	50	–	–	S	S	D	–	–	S	S	–
	175	–	–	S	S	–	–	–	S	S	–
12”	50	–	–	S	S	–	–	–	S	S	–
	175	–	–	S	S	–	–	–	S	S	–
14”	50	–	–	–	S	–	–	–	–	S	–
	150	–	–	–	S	–	–	–	–	–	–
16”	50	–	–	–	S	–	–	–	–	S	–
18”	50	–	–	–	S	–	–	–	–	–	–

a. S = Single actuator, D = Dual actuators, – = Assembly combination not available.
b. SR = Spring return actuator available as configured for normally open and normally closed butterfly valves.
c. NSR = Non spring return actuator.

Table 3: Actuator Features

Actuator Family	Spring Return	Available Input Signals	Available Options
Schneider Electric SmartX SR MX41-7153	Yes	24 Vac. Two Position, Floating, 2 to 10 Vdc, 4 to 20 mA with the addition of a 500 ohm resistor, Proportional	Auxiliary Switch
Direct Coupled NSR NR-22xx	No	24 Vac. Three Wire Two Position, Floating, 0 to 10 Vdc, 4 to 20 mA, Proportional	Auxiliary Switch
High Torque NSR MP-9810-129	No	120 Vac. Three Wire Two Position, Floating, 0 to 10 Vdc, Proportional[a]	Auxiliary Switch (standard)
NEMA 4 with Hand Wheel NSR S70-xxx-	No	120 Vac. or 24 Vac. Three Wire Two Position, Floating, 0 to 10 Vdc, 4 to 20 mA, Proportional	Auxiliary Switch (standard) and Heater (standard)
20 PSI Pneumatic MK-7121/M566	Yes	8 to 13 psi. Nominal Operating Pressure Range	Positive Positioner

a Requires a CP-8391-456 drive for proportional control.

SCHNEIDER ELECTRIC SPRING RETURN SmartX ACTUATORS FOR 2 TO 4" TWO- AND THREE-WAY VALVES

Spring Return Mx41-7153
SmartX Actuator

Table 4: Schneider Electric Spring Return SmartX Actuators for 2 to 4" Two- and Three-Way Valves

Model Number	Actuator Code	Power	Input Signal	Feedback	Power Loss Mode	Accessories
MA41-7153	556 or 556D[b]	24 Vac	On/off	–	SR	–
MF41-7153			Floating			
MS41-7153			2 to 10 Vdc	2 to 10 Vdc		
MA41-7153-502			On/off	–		Two SPDT Auxiliary Switches[a]
MF41-7153-502			Floating			
MS41-7153-502			2 to 10 Vdc	2 to 10 Vdc		

a. Optional. The first part number field of the valve assembly must call out Vxx**S**-6xxx. Note models with 556D actuator code that require auxiliary switch option will ship with one actuator without switches and one actuator with auxiliary switches.
b 556D = Dual Actuators

Actuator Code 556, 556D (Mx41-7153 Series) Technical Data

Power Loss Mode
Spring return.
Control Signal
On/off, floating, or proportional
2 to 10 Vdc., 4 to 20 mA with the addition of a 500 ohm resistor

Power Requirements
24 Vac ± 20%, 22 to 30 Vdc, 9.7VA.
Environment
NEMA 2.
Ambient Temperatures
–22 to 140 °F (–12 to 60 °C).

Agency Listings
UL, CUL, CE.
Manual Operator
Provided on single mount units.
Option
Auxiliary switches
7 A @250 Vac.

SCHNEIDER ELECTRIC ELECTRIC NON-SPRING RETURN ACTUATORS FOR 6 TO 12" TWO- AND THREE-WAY VALVES

Non-Spring Return
MP-9810-129 Actuator

Table 5: Schneider Electric Electric Non-Spring Return High Torque Actuators for 6 to 12" Two- and Three-Way Valves

Model Number	Actuator Code	Power	Input Signal	Feedback	Power Loss Mode	Accessories
MP-9810-129	907	120 Vac	On/off, floating	100 ohm	NSR	SPDT Auxiliary Switch (standard)
MP-9810-129/ CP-8391-456	909		0 to 10 Vdc	–		

Actuator Code 907, 909 (MP-9810-129) Technical Data

Power Loss Mode
Non-spring return.
Control Signal
On/off, floating (907 only).
CP-8391-456 drive, 0 to 10 Vdc adjustable (included with 909 only), optically isolated, 19K Ω input impedance.

Power Requirements
120 Vac 60 Hz, 1.8a.
Add 3.5VA for CP-8391 drive
Environment
NEMA 1.
Ambient Temperatures
–40 to 130 °F (–40 to 50 °C).

Agency Listings
UL.
Standard Auxiliary Switch (Included)
12A resistive at 120 Vac.

NR-22XX NON-SPRING RETURN ACTUATORS FOR 2 TO 6" TWO- AND THREE-WAY VALVES

Non-Spring Return
NR-22xx-5xx Actuator

Table 6: NR-22xx Non-Spring Return Actuators for 2 to 6" Two- and Three-Way Valves

Model Number	Actuator Code	Power	Input Signal	Feedback	Power Loss Mode	Accessories
NR-2216-521	E24	24 Vac	On/off, floating	–	NSR	–
NR-2216-522						Two SPDT Auxiliary Switches[a]
NR-2216-541			0 to 10 Vdc , 4 to 20 mA	0 to 10 Vdc		–
NR-2216-542						Two SPDT Auxiliary Switches[a]
NR-2224-521	E25 or E25D[b]		On/off, floating	–		–
NR-2224-522						Two SPDT Auxiliary Switches[a]
NR-2224-541			0 to 10 Vdc , 4 to 20 mA	0 to 10 Vdc		–
NR-2224-542						Two SPDT Auxiliary Switches[a]

a. Optional. The first part number field of the valve assembly must call out Vxx**S**-6xxx. Note models with E25D actuator code that require auxiliary switch option will ship with one actuator without switches and one actuator with auxiliary switches.
b E25D = Dual Actuators

Actuator Code E24, E25, E25D (NR-2000 Series) Technical Data

Power Loss Mode
Non-spring return.
Control Signal
On/off, floating, or 2 to 10 Vdc, 4 to 20 mA.

Power Requirements
20 to 30 Vac, 24 Vdc ± 10%
NR-2216 6.5VA, NR-2224 7.5VA
Environment
NEMA 2.
Ambient Temperatures
–4 to 122 °F (–2 to 50 °C).

Agency Listings
UL, CSA, CE.
Optional Auxiliary Switch
2 SPDT 24 Vac 1.5 A inductive, 3 A resistive, 35 VA per switch.
Manual Operator
Provided on all models.

S70 NON-SPRING RETURN ACTUATORS FOR 2 TO 18" TWO-WAY AND 2 TO 16" THREE-WAY VALVES

Non-Spring Return
S70-xxxx Actuator

Table 7: S70 Non-Spring Return Actuators for 2 to 18" Two-Way and 2 to 16" Three-Way Valves

Model Number	Actuator Code	Power[a]	Input Signal	Feedback	Power Loss Mode	Accessories
S70-120-0061-H (VAxS)	E10	E=120 Vac F=24 Vac	On/off, floating	–	NSR	Two SPDT Auxiliary Switches and heater (standard)
S70-120-0121-H (VAxS)	E20					
S70-120-0201-H (VAxS)	E30					
S70-120-0301-H (VAxS)	E40					
S70-120-0501-H (VAxS)	E50					
S70-120-0651-H (VAxS)	E60 (120 Vac Only)					
S70-120-0061-SV (VSxS)	E12		0 to 10 Vdc, 4 to 20 mA	0 to 10 Vdc, 4 to 20 mA		
S70-120-0121-SV (VSxS)	E22					
S70-120-0201-SV (VSxS)	E32					
S70-120-0301-SV (VSxS)	E42					
S70-120-0501-SV (VSxS)	E52					
S70-120-0651-SV (VSxS)	E62 (120 Vac Only)					

a. For 24 Vac valve assemblies use F in place of E in the third field (VAFS-6200-F10-L-11). E10 becomes F10 for 24 Vac powered. (F10 actuator code=S70-24-0061-H actuator) For additional voltages contact the factory.

Actuator Code (70 Series) Technical Data

Power Loss Mode
Non-spring return.
Control Signal
Actuator Code
Ex0 (120 Vac) or Fx0 (24 Vac)
On/off, floating

Actuator Code Ex2 (120 Vac) or Fx2 (24 Vac)
Factory configured for 4 to 20 mA with a 250 Ω input impedance, field configrable for 0 to 10 Vdc or 2 to 10 Vdc.
Power Requirements
120 Vac or 24 Vac, 50/60 Hz.

E1x/F1x	1.5a
E2x/F2x,E3x/F3x	2.1a
E4x/F4x,E5x/F5x,E6x	3.0a

Environment
NEMA 4.
Ambient Temperatures
–40 to 150 °F
(–40 to 60 °C).
Agency Listings
UL, CSA, CE.

Standard Auxiliary Switch (Included)
10 A resistive at 125/250 Vac, 1/2 A at 125 Vdc.
Heater
15 W.
Manual Operator with Disconnect
Hand wheel with power disconnect provided on all S70 actuator models.

Note: 24Vac (Fxx) models are Half Wave devices, see F-26363

SCHNEIDER ELECTRIC MK-7121 PNEUMATIC SPRING RETURN ACTUATORS FOR 2 TO 5" TWO-WAY AND 2 AND 2 1/2" THREE-WAY VALVES

Spring Return
MK-7121 Actuator

Table 8: Schneider Electric MK-7121 Pneumatic Spring Return Actuators for 2 to 5" Two-Way and 2 and 2-1/2" Three-Way Valves

Model Number	Actuator Code	Pressure PSI (kPa)	Power Loss Mode	Accessories
MK-7121	221	20 (138)	SR	
MK4-7121				Positive positioner[a]

a. The first part number field must call out VKx**4**-6xxx.

Actuator Code 221 (MK-7121 Series) Technical Data

Pressure Loss Mode
Spring return.
Spring Range
8 to 13.

Diaphragm
20 square inch neoprene.
Ambient Temperatures
–20 to 160 °F (–10 to 70 °C).
Maximum Pressure
30 PSI (200 kPa).

Material
Die cast aluminum housing.
Option
Positive positioner (part number Vxx**4**).

SCHNEIDER ELECTRIC M556 PNEUMATIC SPRING RETURN ACTUATORS FOR 5 TO 10" TWO-WAY AND 3 TO 8" THREE-WAY VALVES

Spring Return
M556-14 Actuator

Table 9: M556 Pneumatic Spring Return Actuators for 5 to 10" Two-Way and 3 to 8" Three-Way Valves

Model Number	Actuator Code	Pressure PSI (kPa)	Power Loss Mode	Accessories
M556-14	251 or 251D[b]	20 (138)	SR	Positive positioner[a]
M556-51				–

a. If a positive positioner is required the first part number field must call out VKx**4**-6xxx. Note if a positive positioner is required for a dual actuator assembly (251D) only one actuator will have a positioner.

b 251D = Dual actuator

Actuator Code 251, 251D Technical Data (M556 Series)

Pressure Loss Mode
Spring return.
Spring Range
8 to 13.

Diaphragm
24.8 square inch neoprene.
Ambient Temperatures
–20 to 180 °F (–10 to 80 °C).
Maximum Pressure
30 PSI (200 kPa).

Material
Glass filled nylon housing.
Option
Positive positioner (part number Vxx**4**).

TWO-WAY VALVE AND SR ACTUATOR ASSEMBLIES

Table 10: Direct Coupled Spring Return Schneider Electric SmartX Actuator and Valve Assemblies, Normally Closed

Model Number[a]			Power	Valve Size	Close Off PSI (kPa)	C_v (K_{vs}) at 90°
On/Off[a]	Floating[a]	Modulating[a]				
VAF-6220-556-L-11	VFF-6220-556-L-11	VSF-6220-556-L-11	24 Vac	2”	175 (1207)	144 (125)
VAF-6220-556-L-12	VFF-6220-556-L-12	VSF-6220-556-L-12		2.5”		282 (244)
VAF-6220-556D-L-13	VFF-6220-556D-L-13	VSF-6220-556D-L-13		3”		461 (399)
VAU-6220-556D-L-14	VFU-6220-556D-L-14	VSU-6220-556D-L-14		4”	50 (345)	841 (727)

a. For optional two SPDT auxiliary switch models, the letter “S” must be added to the first part number field. Ex.: Vxx**S**. Note models with 556D actuator code that require auxiliary switch option will ship with one actuator without switches and one actuator with auxiliary switches.

Table 11: Direct Coupled Spring Return Schneider Electric SmartX Actuator and Valve Assemblies, Normally Open

Model Number[a]			Power	Valve Size	Close Off PSI (kPa)	C_v (K_{vs}) at 90°
On/Off[a]	Floating[a]	Modulating[a]				
VAF-6210-556-L-11	VFF-6210-556-L-11	VSF-6210-556-L-11	24 Vac	2”	175 (1207)	144 (125)
VAF-6210-556-L-12	VFF-6210-556-L-12	VSF-6210-556-L-12		2.5”		282 (244)
VAF-6210-556D-L-13	VFF-6210-556D-L-13	VSF-6210-556D-L-13		3”		461 (399)
VAU-6210-556D-L-14	VFU-6210-556D-L-14	VSU-6210-556D-L-14		4”	50 (345)	841 (727)

a. For optional two SPDT auxiliary switch models, the letter “S” must be added to the first part number field. Ex.: Vxx**S**. Note models with 556D actuator code that require auxiliary switch option will ship with one actuator without switches and one actuator with auxiliary switches.

Table 12: Direct Coupled Non-Spring Return Actuator and Valve Assemblies

TWO-WAY VALVE AND NSR ACTUATOR ASSEMBLIES

Model Number[a]		Power	Valve Size	Close Off PSI (kPa)	C_v (K_{vs}) at 90°
On/Off or Floating[a]	Modulating[a]				
VFF-6200-E24-L-11	VSF-6200-E24-L-11	24 Vac	2”	175 (1207)	144 (125)
VFF-6200-E24-L-12	VSF-6200-E24-L-12		2.5”		282 (244)
VFF-6200-E25-L-13	VSF-6200-E25-L-13		3”		461 (399)
VFF-6200-E25D-L-14	VSF-6200-E25D-L-14		4”		841 (727)
VFU-6200-E25-L-14	VSU-6200-E25-L-14		4”	50 (345)	841 (727)
VFU-6200-E25-L-15	VSU-6200-E25-L-15		5”		1376 (1190)
VFU-6200-E25D-L-16	VSU-6200-E25D-L-16		6”		1850 (1600)

a. For optional two SPDT auxiliary switch models, the letter “S” must be added to the first part number field. Ex.: Vxx**S**. Note models with E25D actuator code that require auxiliary switch option will ship with one actuator without switches and one actuator with auxiliary switches.

Table 13: High Torque Non-Spring Return Actuator and Valve Assemblies with One SPDT Auxiliary Switch

Model Number		Power	Valve Size	Close Off PSI (kPa)	C_v (K_{vs}) at 90°
On/Off or Floating	Modulating				
VAFS-6200-907-L-16	VSFS-6200-909-L-16	120 Vac	6”	175 (1207)	1850 (1600)
VAFS-6200-907-L-17	VSFS-6200-909-L-17		8”	175 (1207)	3316 (2868)
VAUS-6200-907-L-17	VSUS-6200-909-L-17		8”	50 (345)	3316 (2868)
VAFS-6200-907-L-18	VSFS-6200-909-L-18		10”	175 (1207)	5430 (4697)
VAUS-6200-907-L-18	VSUS-6200-909-L-18		10”	50 (345)	5430 (4697)
VAFS-6200-907-L-19	VSFS-6200-909-L-19		12”	175 (1207)	8077 (6987)
VAUS-6200-907-L-19	VSUS-6200-909-L-19		12”	50 (345)	8077 (6987)

Table 14: Two-Way Butterfly Valve Assemblies With S70 Series Non-Spring Return Actuator and NEMA 4, Hand Wheel with Two SPDT Auxiliary Switches and Heater

Model Number		Power[a]	Valve Size	Close Off PSI (kPa)	C_v (K_{vs}) at 90°
On/Off	Modulating				
VAFS-6200-E10-L-11	VSFS-6200-E12-L-11	E=120 Vac	2”	175 (1207)	144 (125)
VAFS-6200-E10-L-12	VSFS-6200-E12-L-12	F=24 Vac	2.5”	175 (1207)	282 (244)
VAFS-6200-E10-L-13	VSFS-6200-E12-L-13		3”	175 (1207)	461 (399)
VAFS-6200-E10-L-14	VSFS-6200-E12-L-14		4”	175 (1207)	841 (727)
VAUS-6200-E10-L-15	VSUS-6200-E12-L-15		5”	50 (345)	1376 (1190)
VAFS-6200-E10-L-15	VSFS-6200-E12-L-15		5”	175 (1207)	1376 (1190)
VAFS-6200-E10-L-16	VSFS-6200-E12-L-16		6”	175 (1207)	1850 (1600)
VAUS-6200-E20-L-17	VSUS-6200-E22-L-17		8”	50 (345)	3316 (2868)
VAFS-6200-E30-L-17	VSFS-6200-E32-L-17		8”	175 (1207)	3316 (2868)
VAUS-6200-E30-L-18	VSUS-6200-E32-L-18		10”	50 (345)	5430 (4697)
VAFS-6200-E40-L-18	VSFS-6200-E42-L-18		10”	175 (1207)	5430 (4697)
VAUS-6200-E40-L-19	VSUS-6200-E42-L-19		12”	50 (345)	8077 (6987)
VAFS-6200-E50-L-19	VSFS-6200-E52-L-19		12”	175 (1207)	8077 (6987)
VAUS-6200-E50-L-20	VSUS-6200-E52-L-20		14”	50 (345)	10,538 (9115)
VAFS-6200-E60-L-20[b]	VSFS-6200-E62-L-20[b]		14”	150 (1034)	10,538 (9115)
VAUS-6200-E60-L-21[b]	VSUS-6200-E62-L-21[b]		16”	50 (345)	13,966 (12,081)
VAUS-6200-E60-L-22[b]	VSUS-6200-E62-L-22[b]		18”	50 (345)	17,214 (14,890)

a. 120 Vac powered models shown, for 24 Vac models change the letter E to F. Example VAFS-6200-F10-L-11 would be 24 Vac powered
b. E60 and E62 only available in 120 Vac

TWO-WAY VALVE AND SR PNEUMATIC ACTUATOR ASSEMBLIES

Table 15: Low Pressure Spring Return Actuator and Pneumatic Assemblies, Normally Closed

Model Number		Pneumatic Pressure PSI (kPa)	Valve Size	Close Off PSI (kPa)	C_v (K_{vs}) at 70°
Base Model	Modulating (Positive Positioner)				
VKF-6220-221-L-11	VKF4-6220-221-L-11	20 (138)	2”	175 (1207)	84 (73)
VKF-6220-221-L-12	VKF4-6220-221-L-12		2.5”	175 (1207)	163 (141)
VKF-6220-221-L-13	VKF4-6220-221-L-13		3”	175 (1207)	267 (231)
VKU-6220-221-L-14	VKU4-6220-221-L-14		4”	50 (345)	496 (429)
VKF-6220-221-L-14	VKF4-6220-221-L-14		4”	175 (1207)	496 (429)
VKU-6220-221-L-15	VKU4-6220-221-L-15		5”	50 (345)	775 (670)
VKF-6220-251-L-15	VKF4-6220-251-L-15		5”	175 (1207)	775 (670)
VKF-6220-251-L-16	VKF4-6220-251-L-16		6”	175 (1207)	1025 (887)
VKU-6220-251-L-17	VKU4-6220-251-L-17		8”	50 (345)	1862 (1611)
VKF-6220-251D-L-17	VKF4-6220-251D-L-17		8”	175 (1207)	1862 (1611)
VKU-6220-251D-L-18	VKU4-6220-251D-L-18		10”	50 (345)	2948 (2550)

Table 16: Low Pressure Spring Return Actuator and Pneumatic Assemblies, Normally Open

Model Number		Pneumatic Pressure PSI (kPa)	Valve Size	Close Off PSI (kPa)	C_v (K_{vs}) at 70°
Base Model	Modulating (Positive Positioner)				
VKF-6210-221-L-11	VKF4-6210-221-L-11	20 (138)	2”	175 (1207)	84 (73)
VKF-6210-221-L-12	VKF4-6210-221-L-12		2.5”	175 (1207)	163 (141)
VKF-6210-221-L-13	VKF4-6210-221-L-13		3”	175 (1207)	267 (231)
VKU-6210-221-L-14	VKU4-6210-221-L-14		4”	50 (345)	496 (429)
VKF-6210-221-L-14	VKF4-6210-221-L-14		4”	175 (1207)	496 (429)
VKU-6210-221-L-15	VKU4-6210-221-L-15		5”	50 (345)	775 (670)
VKF-6210-251-L-15	VKF4-6210-251-L-15		5”	175 (1207)	775 (670)
VKF-6210-251-L-16	VKF4-6210-251-L-16		6”	175 (1207)	1025 (887)
VKU-6210-251-L-17	VKU4-6210-251-L-17		8”	50 (345)	1862 (1611)
VKF-6210-251D-L-17	VKF4-6210-251D-L-17		8”	175 (1207)	1862 (1611)
VKU-6210-251D-L-18	VKU4-6210-251D-L-18		10”	50 (345)	2948 (2550)

THREE-WAY BUTTERFLY VALVE ASSEMBLIES WITH SPRING RETURN SmartX ACTUATORS

Table 17: Direct Coupled Spring Return Schneider Electric SmartX Actuator and Valve Assemblies, Normally Closed

Model Number[b]			Power	Valve Size	Close Off PSI (kPa)	C_v (K_{vs}) at 90°
On/Off[a]	Floating[a]	Modulating[a]				
VAF-632x-556-L-11	VFF-632x-556-L-11	VSF-632x-556-L-11	24 Vac	2”	175 (1207)	144 (125)
VAF-632x-556D-L-12	VFF-632x-556D-L-12	VSF-632x-556D-L-12		2.5”		282 (244)
VAF-632x-556D-L-13	VFF-632x-556D-L-13	VSF-632x-556D-L-13		3”		461 (399)
VAU-632x-556D-L-14	VFU-632x-556D-L-14	VSU-632x-556D-L-14		4”	50 (345)	841 (727)

a. For optional two SPDT auxiliary switch models, the letter “S” must be added to the first part number field. Ex.: Vxx**S**. Note models with 556D actuator code that require auxiliary switch option will ship with one actuator without switches and one actuator with auxiliary switches.
b. X indicates three-way flow patterns 1 or 2. See the flow pattern on page 2.

Table 18: Direct Coupled Spring Return Schneider Electric SmartX Actuator and Valve Assemblies, Normally Open

Model Number[b]			Power	Valve Size	Close Off PSI (kPa)	C_v (K_{vs}) at 90°
On/Off[a]	Floating[a]	Modulating[a]				
VAF-631x-556-L-11	VFF-631x-556-L-11	VSF-631x-556-L-11	24 Vac	2”	175 (1207)	144 (125)
VAF-631x-556D-L-12	VFF-631x-556D-L-12	VSF-631x-556D-L-12		2.5”		282 (244)
VAF-631x-556D-L-13	VFF-631x-556D-L-13	VSF-631x-556D-L-13		3”		461 (399)
VAU-631x-556D-L-14	VFU-631x-556D-L-14	VSU-631x-556D-L-14		4”	50 (345)	841 (727)

a. For optional two SPDT auxiliary switch models, the letter “S” must be added to the first part number field. Ex.: Vxx**S**. Note models with 556D actuator code that require auxiliary switch option will ship with one actuator without switches and one actuator with auxiliary switches.
b. X indicates three-way flow patterns 7 or 8. See the flow pattern on page 2.

THREE-WAY BUTTERFLY VALVE ASSEMBLIES WITH NSR ACTUATORS

Table 19: Direct Coupled Non-Spring Return Actuator and Valve Assemblies

Model Number[b]		Power	Valve Size	Close Off PSI (kPa)	C_v (K_{vs}) at 90°
On/Off or Floating[a]	Modulating[a]				
VFF-630x-E24-L-11	VSF-630x-E24-L-11	24 Vac	2”	175 (1207)	144 (125)
VFF-630x-E25-L-12	VSF-630x-E25-L-12		2.5”		282 (244)
VFF-630x-E25-L-13	VSF-630x-E25-L-13		3”		461 (399)
VFF-630x-E25D-L-14	VSF-630x-E25D-L-14		4”		841 (727)
VFU-630x-E25-L-14	VSU-630x-E25-L-14		4”	50 (345)	841 (727)
VFU-630x-E25D-L-15	VSU-630x-E25D-L-15		5”		1376 (1190)
VFU-630x-E25D-L-16	VSU-630x-E25D-L-16		6”		1850 (1600)

a. For optional two SPDT auxiliary switch models, the letter “S” must be added to the first part number field. Ex.: Vxx**S**. Note models with E25D actuator code that require auxiliary switch option will ship with one actuator without switches and one actuator with auxiliary switches.

b. X indicates three-way flow patterns 1, 2, 7, or 8. See the flow pattern on page 2.

Table 20: Three-Way Butterfly Valve Assemblies with High Torque Non-Spring Return Actuator with One SPDT Auxiliary Switch

Model Number[a]		Power	Valve Size	Close Off PSI (kPa)	C_v (K_{vs}) at 90°
On/Off or Floating	Modulating				
VAFS-630x-907-L-16	VSFS-630x-909-L-16	120 Vac	6”	175 (1207)	1850 (1600)
VAFS-630x-907-L-17	VSFS-630x-909-L-17		8”	175 (1207)	3316 (2868)
VAUS-630x-907-L-17	VSUS-630x-909-L-17		8”	50 (345)	3316 (2868)
VAFS-630x-907-L-18	VSFS-630x-909-L-18		10”	175 (1207)	5430 (4697)
VAUS-630x-907-L-18	VSUS-630x-909-L-18		10”	50 (345)	5430 (4697)
VAFS-630x-907-L-19	VSFS-630x-909-L-19		12”	175 (1207)	8077 (6987)
VAUS-630x-907-L-19	VSUS-630x-909-L-19		12”	50 (345)	8077 (6987)

a. X indicates three-way flow patterns 1, 2, 7, or 8. See the flow pattern on page 2.

Table 21: Three-Way Butterfly Valve Assemblies With S70 Series Non-Spring Return Actuator and NEMA 4, Hand Wheel with Two SPDT Auxiliary Switches and Heater

Model Number[c]		Power[a]	Valve Size	Close Off PSI (kPa)	C_v (K_{vs}) at 90°
On/Off	Modulating				
VAFS-630x-E10-L-11	VSFS-630x-E12-L-11	E=120 Vac	2”	175 (1207)	144 (125)
VAFS-630x-E10-L-12	VSFS-630x-E12-L-12	F=24 Vac	2.5”	175 (1207)	282 (244)
VAFS-630x-E10-L-13	VSFS-630x-E12-L-13		3”	175 (1207)	461 (399)
VAUS-630x-E10-L-14	VSUS-630x-E12-L-14		4”	50 (345)	841 (727)
VAFS-630x-E10-L-14	VSFS-630x-E12-L-14		4”	175 (1207)	841 (727)
VAUS-630x-E10-L-15	VSUS-630x-E12-L-15		5”	50 (345)	1376 (1190)
VAFS-630x-E10-L-15	VSFS-630x-E12-L-15		5”	175 (1207)	1376 (1190)
VAUS-630x-E20-L-16	VSUS-630x-E22-L-16		6”	50 (345)	1850 (1600)
VAFS-630x-E20-L-16	VSFS-630x-E22-L-16		6”	175 (1207)	1850 (1600)
VAUS-630x-E20-L-17	VSUS-630x-E22-L-17		8”	50 (345)	3316 (2868)
VAFS-630x-E30-L-17	VSFS-630x-E32-L-17		8”	175 (1207)	3316 (2868)
VAUS-630x-E30-L-18	VSUS-630x-E32-L-18		10”	50 (345)	5430 (4697)
VAFS-630x-E50-L-18	VSFS-630x-E52-L-18		10”	175 (1207)	5430 (4697)
VAUS-630x-E50-L-19	VSUS-630x-E52-L-19		12”	50 (345)	8077 (6987)
VAFS-630x-E60-L-19[b]	VSFS-630x-E62-L-19[b]		12”	175 (1207)	8077 (6987)
VAUS-630x-E50-L-20	VSUS-630x-E52-L-20		14”	50 (345)	10,538 (9115)
VAUS-630x-E60-L-21[b]	VSUS-630x-E62-L-21[b]		16”	50 (345)	13,966 (12,081)

a. 120 Vac powered models shown, for 24 Vac models change the letter E to F. Example VAFS-630x-F10-L-11 would be 24 Vac powered.
b. E60 and E62 only available in 120 Vac.
c. X = 1, 2, 7, or 8. See the flow pattern on page 2.

THREE-WAY VALVE AND SR PNEUMATIC ACTUATOR ASSEMBLIES

Table 22: Low Pressure Spring Return Actuator and Valve Pneumatic Assemblies, Normally Closed

Model Number[a]		Pneumatic Pressure PSI (kPa)	Valve Size	Close Off PSI (kPa)	C_v (K_{vs}) at 70°
Base Model	Modulating (Positive Positioner)				
VKF-632x-221-L-11	VKF4-632x-221-L-11	20 (138)	2”	175 (1207)	84 (73)
VKF-632x-221-L-12	VKF4-632x-221-L-12		2.5”	175 (1207)	163 (141)
VKF-632x-251-L-13	VKF4-632x-251-L-13		3”	175 (1207)	267 (231)
VKF-632x-251-L-14	VKF4-632x-251-L-14		4”	175 (1207)	496 (429)
VKU-632x-251-L-15	VKU4-632x-251-L-15		5”	50 (345)	775 (670)
VKF-632x-251-L-15	VKF4-632x-251-L-15		5”	175 (1207)	775 (670)
VKU-632x-251-L-16	VKU4-632x-251-L-16		6”	50 (345)	1025 (887)
VKF-632x-251D-L-16	VKF4-632x-251D-L-16		6”	175 (1207)	1025 (887)
VKU-632x-251D-L-17	VKU4-632x-251D-L-17		8”	50 (345)	1862 (1611)

a. X = 1 or 2. See the flow pattern on page 2.

Table 23: Low Pressure Spring Return Actuator and Valve Pneumatic Assemblies, Normally Open

Model Number[a]		Pneumatic Pressure PSI (kPa)	Valve Size	Close Off PSI (kPa)	C_v (K_{vs}) at 70°
Base Model	Modulating (Positive Positioner)				
VKF-631x-221-L-11	VKF4-631x-221-L-11	20 (138)	2”	175 (1207)	84 (73)
VKF-631x-221-L-12	VKF4-631x-221-L-12		2.5”	175 (1207)	163 (141)
VKF-631x-251-L-13	VKF4-631x-251-L-13		3”	175 (1207)	267 (231)
VKF-631x-251-L-14	VKF4-631x-251-L-14		4”	175 (1207)	496 (429)
VKU-631x-251-L-15	VKU4-631x-251-L-15		5”	50 (345)	775 (670)
VKF-631x-251-L-15	VKF4-631x-251-L-15		5”	175 (1207)	775 (670)
VKU-631x-251-L-16	VKU4-631x-251-L-16		6”	50 (345)	1025 (887)
VKF-631x-251D-L-16	VKF4-631x-251D-L-16		6”	175 (1207)	1025 (887)
VKU-631x-251D-L-17	VKU4-631x-251D-L-17		8”	50 (345)	1862 (1611)

a. X = 7 or 8. See the flow pattern on page 2.

VALVE BODY TECHNICAL DATA

Service
Hot and chilled water, up to 60% glycol. See EN-205 Water System Guidelines, F-26080.

Fluid Temperature limits
–40 to 250 °F (–40 to 120 °C).

Sizes
2 to 18” two-way models.
2 to 16“ three-way models.

Neck
2” extended neck.

Flow
Bidirectional

Leakage
Bubble Tight Shut Off

Materials

Body
Polyester coated cast Iron ASTM A126 Class B lug.
Mates with ANSI Class 125/150 flanges.

Stem
2 to 8”: 416 stainless steel double D stem.
10” and 12”: 316 stainless steel double D stem.
14” and up: 316 Stainless Steel round shaft woodruff key slot

Disc
Ductile iron nylon 11 coated disc

Seat
EPDM tongue and groove seat and molded O-ring flange seal.

CV FLOWS BASED ON DISC POSITION

Table 24: Cv Values[a]

							Factory Set Pneumatic		Factory Set Electric
	Disc Position in Degrees								
Valve Size	10°	20°	30°	40°	50°	60°	70°	80°	90°
2”	1	7	16	27	43	61	84	114	144
2-1/2”	1.5	11	24	43	67	107	163	223	282
3”	2	15	35	61	96	154	267	364	461
4”	3	27	62	109	171	274	496	701	841
5”	5	43	98	170	268	428	775	1146	1376
6”	6	56	129	225	354	567	1025	1542	1850
8”	12	102	241	421	690	1081	1862	2842	3316
10”	19	162	382	667	1076	1710	2948	4525	5430
12”	27	235	555	1005	1594	2563	4393	6731	8077
14”	34	299	756	1320	2149	3384	5939	8874	10,538
16”	45	397	1001	1749	2847	4483	7867	11,761	13,966
18”	58	507	1281	2237	3643	5736	10,065	14,496	17,214

a. Cv x .865 = Kvs
Cv is defined as the volume of water in US gallon per minute (GPM) that flows through a given restriction or valve opening with a pressure drop of one PSI at room temperature.
The best equal percentage flow characteristic is between 20 to 70 degrees of disc opening. Above 70 degrees the flow characteristic is primarily quick opening. Application engineers requiring good equal percentage floating or proportional control should size the valve for the required Cv according to Table 24, and limit the disc rotation to a maximum of 70 degrees in the field. Various methods can be used to limit the disc rotation including in the controller, electrically at the actuator (for proportional actuators only), or mechanically at the actuator. Two position actuators should not be selected for applications requiring equal percentage flow characteristics.

REQUIRED TIGHTENING TORQUE

BOLT TIGHTENING SEQUENCE (TYPICAL)

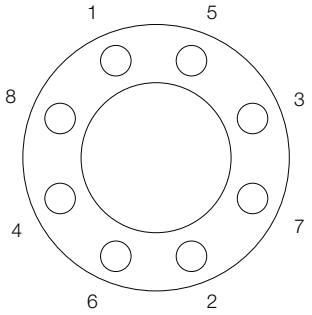

Required Tightening Torque[a]

Valve Size	Bolt Size/ Threads UNC-28	Max Bolt Torque (ft-lbs)
2”, 3”, 4”	5/8”-11	35
5”, 6”, 8”	3/4”-10	60
10”, 12”	7/8”-9	75-110
14”, 16”	1”-8	120
18”	1-1/8”-7	130

a. Installation: Lower the valve into the open pipe work with the disc in the 10° open position. Valves with non-spring actuators are shipped in this position. Once the valve is place in the pipe work, turn the disc to the full-open position. Gradually remove the flange spreaders (if used). Center the valve body to the flanges, and tighten the bolts hand-tight. Slowly close the valve clockwise to check for adequate disc clearance. Return disc to full-open position and cross tighten all bolts to proper torque specification. Do not install with the disc in fully closed position. This will cause seat distortion. When flange bolts are tightened, rubber will close around disc edge creating excessive torque in initial operation.

2 TO 4" TWO-WAY BUTTERFLY VALVE ASSEMBLIES WITH SmartX SPRING RETURN ACTUATOR DIMENSIONS

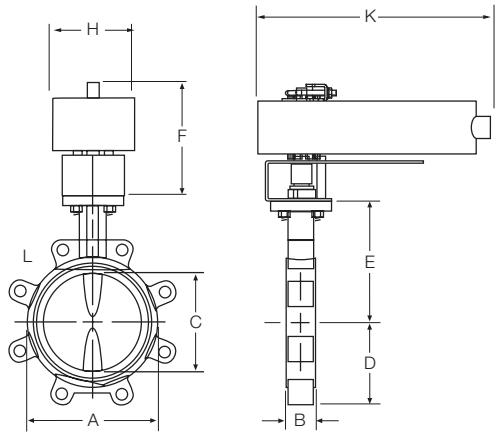

SINGLE ACTUATOR (556)

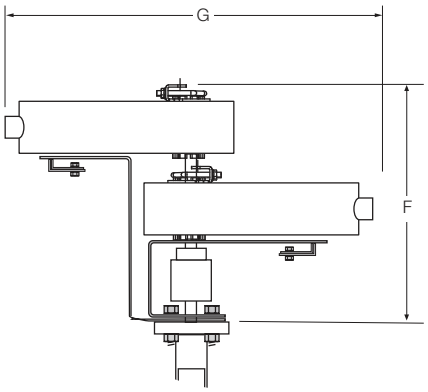

DUAL MOUNT (556D)

Table 25: Two-Way SR

Valve Assembly Part Number	Valve Size In	Dimensions in inches (millimetres)									
		A	B	C	D	E	F	G	H	K	L Lug Bolt Threads
VxFx-62x0-556-L-11	2"	3.69 (94)	1.62 (41)	2.00 (51)	2.30 (59)	5.50 (140)	6.00 (152)	—	4.00 (102)	12.5 (318)	(4) - 5/8"-11
VxFx-62x0-556-L-12	2-1/2"	4.19 (106)	1.75 (45)	2.50 (64)	2.57 (65)	6.00 (152)	6.00 (152)	—	4.00 (102)	12.5 (318)	(4) - 5/8"-11
VxFx-62x0-556D-L-13	3"	4.88 (124)	1.75 (45)	3.00 (76)	2.81 (71)	6.25 (159)	11.75 (298)	19.00 (483)	4.00 (102)	—	(4) - 5/8"-11
VxUx-62x0-556D-L-14	4"	6.06 (154)	2.00 (51)	4.00 (102)	4.09 (104)	7.00 (179)	11.75 (298)	19.00 (483)	4.00 (102)	—	(8) - 5/8"-11

2 TO 4" THREE-WAY BUTTERFLY VALVE ASSEMBLIES WITH SmartX SPRING RETURN ACTUATOR DIMENSIONS

TOP VIEW

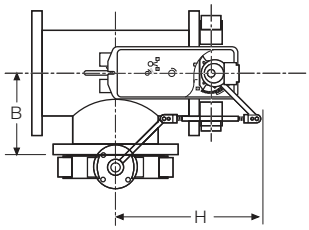

SIDE VIEW

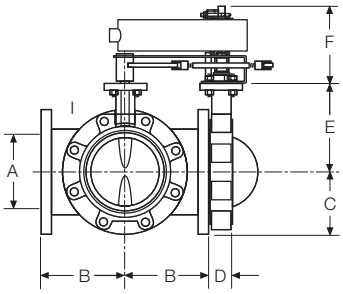

SINGLE MOUNT (556)

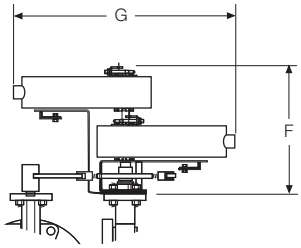

DUAL MOUNT (556D)

Table 26: Three-Way SR

Valve Assembly Part Number	Valve Size In	Dimensions in inches (millimetres)								
		A	B	C	D	E	F	G	H	I Lug Bolt Threads
VxFx-63xx-556-L-11	2"	2.00 (51)	4.50 (114)	3.00 (76)	1.62 (41)	5.50 (140)	7.50 (190.5)	—	12.00 (305)	(4) - 5/8"-11
VxFx-63xx-556D-L-12	2-1/2"	2.50 (64)	5.00 (127)	3.50 (89)	1.80 (46)	6.00 (152)	13.25 (336)	19.00 (483)	13.00 (330)	(4) - 5/8"-11
VxFx-63xx-556D-L-13	3"	3.00 (76)	5.50 (140)	3.80 (97)	1.80 (46)	6.20 (157)	13.25 (336)	19.00 (483)	13.50 (343)	(4) - 5/8"-11
VxUx-63xx-556D-L-14	4"	4.00 (102)	6.50 (1.65)	4.50 (114)	2.00 (51)	7.00 (179)	13.25 (336)	19.00 (483)	14.50 (368)	(8) - 5/8"-11

2 TO 6" TWO-WAY BUTTERFLY VALVE ASSEMBLIES WITH NON-SPRING RETURN ACTUATOR DIMENSIONS

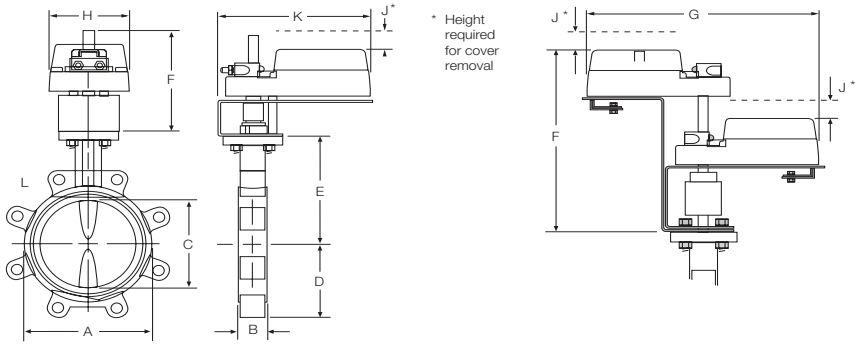

SINGLE MOUNT

DUAL MOUNT

Table 27: Two-Way NSR

Valve Assembly Part Number	Valve Size In	Dimensions in inches (millimetres)										
		A	B	C	D	E	F	G	H	J	K	L Lug Bolt Threads
VxFx-6200-E24-L-11	2"	3.69 (94)	1.62 (41)	2.00 (51)	2.30 (59)	5.50 (140)	6.00 (152)	—	4.00 (102)	2.00 (51)	7.50 (191)	(4) - 5/8"-11
VxFx-6200-E24-L-12	2-1/2"	4.19 (106)	1.75 (45)	2.50 (64)	2.57 (65)	6.00 (152)	6.00 (152)	—	4.00 (102)	2.00 (51)	7.50 (191)	(4) - 5/8"-11
VxFx-6200-E25-L-13	3"	4.88 (124)	1.75 (45)	3.00 (76)	2.81 (71)	6.25 (159)	6.00 (152)	—	4.00 (102)	2.00 (51)	7.50 (191)	(4) - 5/8"-11
VxUx-6200-E25-L-14	4"	6.06 (154)	2.00 (51)	4.00 (102)	4.09 (104)	7.00 (179)	6.00 (152)	—	4.00 (102)	2.00 (51)	7.50 (191)	(8) - 5/8"-11
VxFx-6200-E25D-L-14	4"	6.06 (154)	2.00 (51)	4.00 (102)	4.09 (104)	7.00 (179)	11.75 (298)	16.00 (404)	5.00 (127)	2.00 (51)	—	(8) - 5/8"-11
VxUx-6200-E25-L-15	5"	7.06 (179)	2.12 (54)	5.00 (127)	4.61 (117)	7.50 (190)	6.00 (152)	—	4.00 (102)	2.00 (51)	7.50 (191)	(8) - 3/4"-10
VxUx-6200-E25D-L-16	6"	8.12 (206)	2.12 (54)	5.75 (146)	5.06 (129)	8.00 (203)	11.75 (298)	16.00 (404)	5.00 (127)	2.00 (51)	—	(8) - 3/4"-10

2 TO 6" THREE-WAY BUTTERFLY VALVE ASSEMBLIES WITH NON-SPRING RETURN ACTUATOR DIMENSIONS

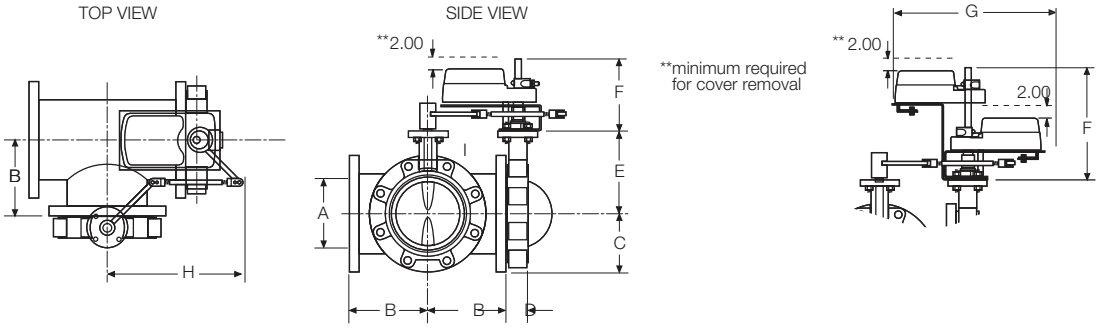

SINGLE MOUNT

DUAL MOUNT

Table 28: Three-Way NSR

Valve Assembly Part Number	Valve Size In	Dimensions in inches (millimetres)								
		A	B	C	D	E	F	G	H	I Lug Bolt Threads
VxFx-630x-E24-L-11	2"	2.00 (51)	4.50 (114)	3.00 (76)	1.62 (41)	5.50 (140)	7.50 (191)	—	12.00 (305)	(4) - 5/8"-11
VxFx-630x-E24-L-12	2-1/2"	2.50 (64)	5.00 (127)	3.50 (89)	1.80 (46)	6.00 (152)	7.50 (191)	—	13.00 (330)	(4) - 5/8"-11
VxFx-630x-E25-L-13	3"	3.00 (76)	5.50 (140)	3.80 (97)	1.80 (46)	6.20 (157)	7.50 (191)	—	13.50 (343)	(4) - 5/8"-11
VxUx-630x-E25-L-14	4"	4.00 (102)	6.50 (165)	4.50 (114)	2.00 (51)	7.00 (179)	7.50 (191)	—	14.50 (368)	(8) - 5/8"-11
VxFx-630x-E25D-L-14	4"	4.00 (102)	6.50 (165)	4.50 (114)	2.00 (51)	7.00 (179)	13.25 (337)	16.00 (406)	14.50 (368)	(8) - 5/8"-11
VxUx-630x-E25D-L-15	5"	5.00 (127)	7.50 (190)	5.00 (127)	2.12 (54)	7.50 (190)	13.25 (337)	16.00 (406)	15.50 (394)	(8) - 3/4"-10
VxUx-630x-E25D-L-16	6"	5.80 (147)	8.00 (203)	5.50 (140)	2.12 (54)	8.00 (203)	13.25 (337)	16.00 (406)	16.25 (413)	(8) - 3/4"-10

6 TO 12" TWO-WAY BUTTERFLY VALVES ASSEMBLIES WITH HIGH TORQUE NON-SPRING RETURN ACTUATOR DIMENSIONS

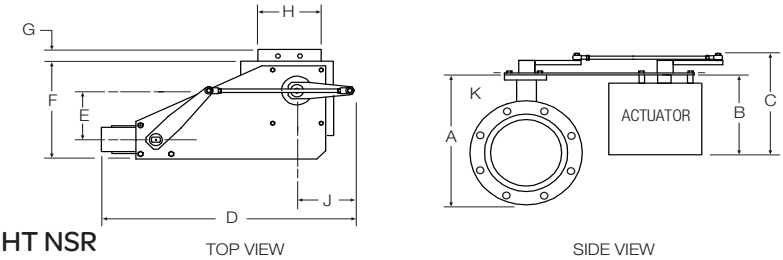

Table 29: Two-Way HT NSR

Valve Assembly Part Number	Valve Size In	Dimensions in inches (millimetres)									
		A	B	C	D	E	F	G	H	J	K Lug Bolt Threads
On Off or Floating Control											
VAFS-6200-907-L-16	6"	13.06 (332)	9.50 (241)	12.50 (318)	26.80 (681)	6.50 (165)	12.75 (324)	—	—	5.74 (146)	(8) - 3/4"-10
VAFS-6200-907-L-17 VAUS-6200-907-L-17	8"	15.55 (395)	9.50 (241)	12.50 (318)	27.79 (706)	6.50 (165)	12.75 (324)	—	—	5.74 (146)	(8) - 3/4"-10
VAFS-6200-907-L-18 VAUS-6200-907-L-18	10"	18.44 (468)	9.50 (241)	12.50 (318)	29.43 (748)	6.50 (165)	12.75 (324)	—	—	5.74 (146)	(12) - 7/8"-9
VAFS-6200-907-L-19 VAUS-6200-907-L-19	12"	21.27 (540)	9.50 (241)	12.50 (318)	30.76 (781)	6.50 (165)	12.75 (324)	—	—	5.74 (146)	(12) - 7/8"-9
Modulated Control											
VSFS-6200-909-L-16	6"	13.06 (332)	9.50 (241)	12.50 (318)	26.80 (681)	6.50 (165)	12.75 (324)	4.00 (102)	6.50 (165)	5.74 (146)	(8) - 3/4"-10
VSFS-6200-909-L-17 VAUS-6200-909-L-17	8"	15.55 (395)	9.50 (241)	12.50 (318)	27.79 (706)	6.50 (165)	12.75 (324)	4.00 (102)	6.50 (165)	5.74 (146)	(8) - 3/4"-10
VSFS-6200-909-L-18 VAUS-6200-909-L-18	10"	18.44 (468)	9.50 (241)	12.50 (318)	29.43 (748)	6.50 (165)	12.75 (324)	4.00 (102)	6.50 (165)	5.74 (146)	(12) - 7/8"-9
VSFS-6200-909-L-19 VAUS-6200-909-L-19	12"	21.27 (540)	9.50 (241)	12.50 (318)	30.76 (781)	6.50 (165)	12.75 (324)	4.00 (102)	6.50 (165)	5.74 (146)	(12) - 7/8"-9

6 TO 12" THREE-WAY BUTTERFLY VALVE ASSEMBLIES WITH HIGH TORQUE NON-SPRING RETURN ACTUATOR DIMENSIONS

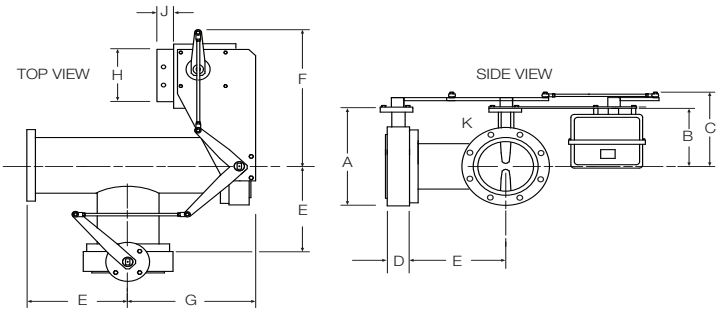

Table 30: Three-Way HT NSR

Valve Assembly Part Number	Valve Size In	Dimensions in inches (millimetres)									
		A	B	C	D	E	F	G	H	J	K Lug Bolt Threads
Two Position/Floating Control											
VAFS-630x-907-L-16	6"	13.06 (332)	9.50 (241)	12.50 (318)	2.12 (54)	8.00 (203)	12.75 (324)	11.77 (299)	—	—	(8) - 3/4"-10
VAFS-630x-907-L-17 VAUS-630x-907-L-17	8"	15.55 (395)	9.50 (241)	12.50 (318)	2.50 (63)	9.00 (229)	12.75 (324)	13.21 (336)	—	—	(8) - 3/4"-10
VAFS-630x-907-L-18 VAUS-630x-907-L-18	10"	18.44 (468)	9.50 (241)	12.50 (318)	2.50 (63)	11.00 (279)	12.75 (324)	15.21 (386)	—	—	(12) - 7/8"-8
VAFS-630x-907-L-19 VAUS-630x-907-L-19	12"	21.27 (540)	9.50 (241)	12.50 (318)	3.00 (76)	12.00 (305)	12.75 (324)	16.66 (423)	—	—	(12) - 7/8"-8
Modulated											
VSFS-630x-909-L-16	6"	13.06 (332)	9.50 (241)	12.50 (318)	2.12 (54)	8.00 (203)	12.75 (324)	11.77 (299)	6.50 (165)	4.00 (102)	(8) - 3/4"-10
VSFS-630x-909-L-17 VSUS-630x-909-L-17	8"	15.55 (395)	9.50 (241)	12.50 (318)	2.50 (63)	9.00 (229)	12.75 (324)	13.21 (336)	6.50 (165)	4.00 (102)	(8) - 3/4"-10
VSFS-630x-909-L-18 VSUS-630x-909-L-18	10"	18.44 (468)	9.50 (241)	12.50 (318)	2.50 (63)	11.00 (279)	12.75 (324)	15.21 (386)	6.50 (165)	4.00 (102)	(12) - 7/8"-9
VSFS-630x-909-L-19 VSUS-630x-909-L-19	12"	21.27 (540)	9.50 (241)	12.50 (318)	3.00 (76)	12.00 (305)	12.75 (324)	16.66 (423)	6.50 (165)	4.00 (102)	(12) - 7/8"-9

2 TO 18" TWO-WAY BUTTERFLY VALVE ASSEMBLIES WITH S70 NON-SPRING RETURN NEMA 4 ACTUATOR DIMENSIONS

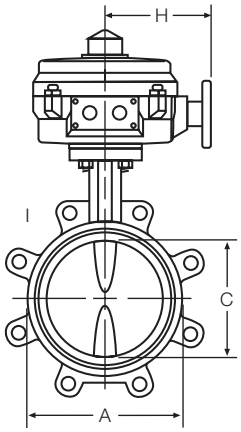

FRONT VIEW

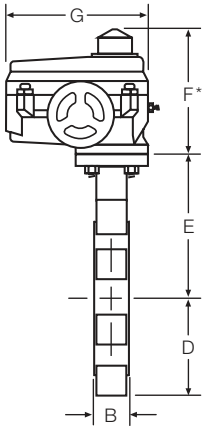

SIDE VIEW

* allow 3.38"(86) for cover removal

Table 31: Two-Way N4 NSR

Valve Assembly Part Number[a]	Valve Size In	Dimensions in inches (millimetres)								
		A	B	C	D	E	F	G	H	I Lug Bolt Threads
VxFS-6200-E1x-L-11	2"	3.69 (94)	1.62 (41)	2.00 (51)	2.30 (58)	5.50 (140)	6.70 (170)	7.50 (191)	5.80 (147)	(4) - 5/8"-11
VxFS-6200-E1x-L-12	2-1/2"	4.19 (106)	1.75 (44)	2.50 (63)	2.57 (65)	6.00 (152)	6.70 (170)	7.50 (191)	5.80 (147)	(4) - 5/8"-11
VxFS-6200-E1x-L-13	3"	4.88 (124)	1.75 (44)	3.00 (76)	2.81 (71)	6.25 (159)	6.70 (170)	7.50 (191)	5.80 (147)	(4) - 5/8"-11
VxFS-6200-E1x-L-14	4"	6.06 (154)	2.00 (51)	4.00 (102)	4.09 (104)	7.00 (178)	6.70 (170)	7.50 (191)	5.80 (147)	(8) - 5/8"-11
VxUS-6200-E1x-L-15	5"	7.06 (179)	2.12 (54)	5.00 (127)	4.61 (117)	7.50 (190)	6.70 (170)	7.50 (191)	5.80 (147)	(8) - 3/4"-10
VxFS-6200-E2x-L-15	5"	7.06 (179)	2.12 (54)	5.00 (127)	4.61 (117)	7.50 (190)	8.10 (206)	10.10 (257)	7.80 (198)	(8) - 3/4"-10
VxFS-6200-E2x-L-16	6"	8.12 (206)	2.12 (54)	5.75 (146)	5.06 (129)	8.00 (203)	8.10 (206)	10.10 (257)	7.80 (198)	(8) - 3/4"-10
VxUS-6200-E2x-L-17 VxFS-6200-E3x-L-17	8"	10.50 (267)	2.50 (63)	7.75 (199)	6.05 (154)	9.50 (241)	8.10 (206)	10.10 (257)	7.80 (198)	(8) - 3/4"-10
VxUS-6200-E3x-L-18	10"	12.75 (324)	2.50 (63)	9.75 (248)	7.69 (195)	10.75 (273)	8.10 (206)	10.10 (257)	7.80 (198)	(12) - 7/8"-9
VxFS-6200-E4x-L-18	10"	12.75 (324)	2.50 (63)	9.75 (248)	7.69 (195)	10.75 (273)	8.80 (224)	12.10 (307)	9.50 (241)	(12) - 7/8"-9
VxUS-6200-E4x-L-19 VxFS-6200-E5x-L-19	12"	14.88 (378)	3.00 (76)	11.75 (298)	9.02 (229)	12.25 (311)	8.80 (224)	12.10 (307)	9.50 (241)	(12) - 7/8"-9
VxUS-6200-E5x-L-20 VxFS-6200-E6x-L-20	14"	17.05 (433)	3.00 (76)	13.25 (337)	9.93 (252)	13.62 (346)	8.80 (224)	12.10 (307)	9.50 (241)	(12) - 1"- 8
VxUS-6200-E6x-L-21	16"	19.21 (488)	4.00 (102)	15.25 (338)	11.30 (287)	14.75 (375)	8.80 (224)	12.10 (307)	9.50 (241)	(16) - 1"- 8
VxUS-6200-E6x-L-22	18"	21.12 (536)	4.25 (108)	17.25 (438)	12.16 (309)	16.00 (406)	8.80 (224)	12.10 (307)	9.50 (241)	(16) - 1 1/8"-7

a. Actuator code Exx or Fxx Dimensions are the same

2 TO 16" THREE-WAY BUTTERFLY VALVE ASSEMBLIES WITH S70 NON-SPRING RETURN NEMA 4 ACTUATOR DIMENSIONS

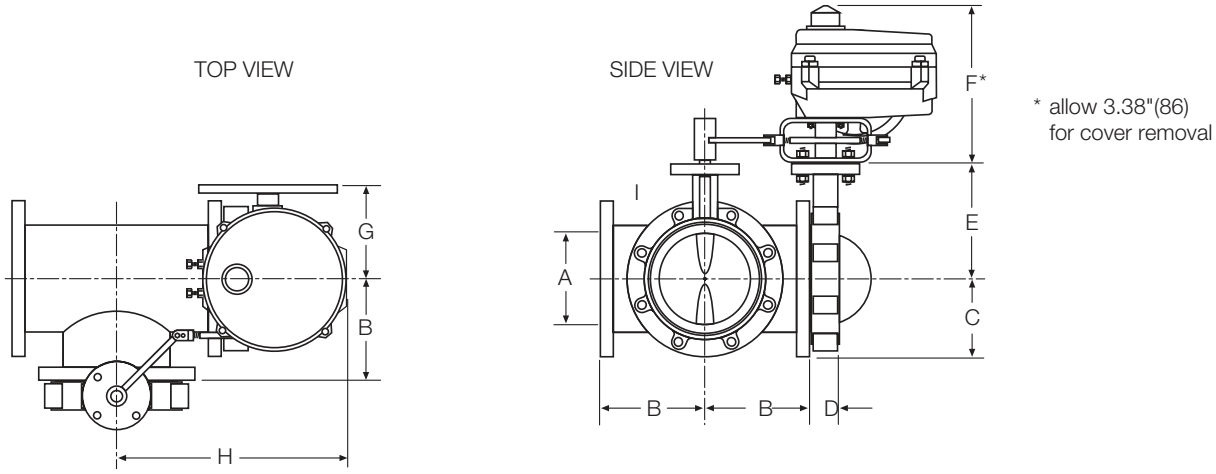

Table 32: Three-Way N4 NSR

Valve Assembly Part Number[a]	Valve Size In	Dimensions in inches (millimetres)								
		A	B	C	D	E	F	G	H	I Lug Bolt Threads
VxFS-630x-E1x-L-11	2"	2.00 (51)	4.50 (114)	3.00 (76)	1.62 (41)	5.50 (140)	9.70 (246)	5.80 (147)	11.00 (279)	(4) - 5/8"-11
VxFS-630x-E1x-L-12	2-1/2"	2.50 (63)	5.00 (127)	3.50 (89)	1.80 (46)	6.00 (152)	9.70 (246)	5.80 (147)	11.60 (295)	(4) - 5/8"-11
VxFS-630x-E1x-L-13	3"	3.00 (76)	5.50 (140)	3.80 (97)	1.80 (46)	6.20 (157)	9.70 (246)	5.80 (147)	12.00 (305)	(4) - 5/8"-11
VxUS-630x-E1x-L-14	4"	4.00 (102)	6.50 (165)	4.50 (114)	2.00 (51)	7.00 (179)	9.70 (246)	5.80 (147)	13.90 0(353)	(8) - 5/8"-11
VxFS-630x-E2x-L-14	4"	4.00 (102)	6.50 (165)	4.50 (114)	2.00 (51)	7.00 (179)	11.10 (282)	7.80 (198)	15.20 (386)	(8) - 5/8"-11
VxUS-630x-E1x-L-15	5"	5.00 (127)	7.50 (190)	5.00 (127)	2.12 (54)	7.50 (190)	9.70 (246)	5.80 (147)	14.29 (363)	(8) - 3/4"-10
VxFS-630x-E2x-L-15	5"	5.00 (127)	7.50 (190)	5.00 (127)	2.12 (54)	7.50 (190)	11.10 (282)	7.80 (198)	16.30 (414)	(8) - 3/4"-10
VxUS-630x-E2x-L-16 VxFS-630x-E2x-L-16	6"	5.80 (147)	8.00 (203)	5.50 (140)	2.12 (54)	8.00 (203)	11.10 (282)	7.80 (198)	16.80 (427)	(8) - 3/4"-10
VxUS-630x-E2x-L-17 VxFS-630x-E3x-L-17	8"	7.80 (198)	9.00 (229)	6.80 (173)	2.50 (63)	9.50 (241)	11.10 (282)	7.80 (198)	18.00 (457)	(8) - 3/4"-10
VxUS-630x-E3x-L-18	10"	9.80 (249)	11.00 (279)	8.00 (203)	2.50 (63)	10.80 (274)	11.10 (282)	7.80 (198)	20.00 (508)	(12) - 7/8"-9
VxFS-630x-E5x-L-18	10"	9.80 (249)	11.00 (279)	8.00 (203)	2.50 (63)	10.80 (274)	12.80 (325)	9.50 (241)	21.50 (546)	(12) - 7/8"-9
VxUS-630x-E5x-L-19 VxFS-630x-E6x-L-19	12"	11.80 (300)	12.00 (305)	9.50 (241)	3.00 (76)	12.20 (310)	12.80 (325)	9.50 (241)	22.74 (578)	(12) - 7/8"-9
VxUS-630x-E5x-L-20	14"	13.20 (335)	14.00 (356)	10.50 (267)	3.00 (76)	13.60 (345)	12.80 (325)	9.50 (241)	24.74 (628)	(12) - 1"- 8
VxFS-630x-E6x-L-21	16"	15.20 (386)	15.00 (381)	11.80 (300)	4.00 (102)	14.80 (376)	12.80 (325)	9.50 (241)	26.25 (667)	(16) - 1"- 8

a. Actuator code Exx or Fxx Dimensions are the same.

2 TO 8" TWO-WAY BUTTERFLY VALVE ASSEMBLIES WITH SINGLE PNEUMATIC ACTUATOR VALVE DIMENSIONS

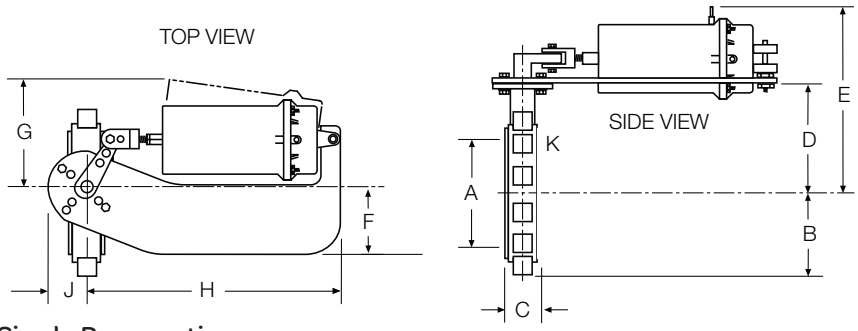

Table 33: Two-Way Single Pneumatic

Valve Assembly Part Number[a]	Valve Size In	Dimensions in inches (millimetres)									
		A	B	C	D	E	F	G	H	J	K Lug Bolt Threads
VkFx-62xx-221-L-11	2"	2.00 (51)	2.30 (58)	1.62 (41)	5.50 (140)	8.62 (219)	4.88 (124)	9.31 (237)	19.94 (507)	2.00 (51)	(4) - 5/8"-11
VkFx-62xx-221-L-12	2-1/2"	2.50 (64)	2.57 (65)	1.75 (45)	6.00 (152)	9.12 (232)	4.88 (124)	9.31 (237)	19.94 (507)	2.00 (51)	(4) - 5/8"-11
VkFx-62xx-221-L-13	3"	3.00 (76)	2.81 (71)	1.75 (45)	6.25 (159)	9.38 (238)	5.45 (138)	9.31 (237)	19.94 (507)	2.00 (51)	(4) - 5/8"-11
VkUx-62xx-221-L-14 VkFx-62xx-221-L-14	4"	4.00 (102)	4.09 (104)	2.00 (51)	7.00 (178)	13.75 (349)	5.45 (138)	9.31 (237)	19.94 (507)	2.00 (51)	(8) - 5/8"-11
VkUx-62xx-221-L-15	5"	5.00 (127)	4.61 (117)	2.12 (54)	7.50 (191)	14.38 (365)	5.45 (138)	9.31 (237)	19.94 (507)	2.00 (51)	(8) - 3/4"-10
VkFx-62xx-251-L-15	5"	5.00 (127)	4.61 (117)	2.12 (54)	7.50 (191)	14.38 (365)	5.45 (138)	10.94 (278)	25.81 (656)	3.00 (76)	(8) - 3/4"-10
VkFx-62xx-251-L-16	6"	5.75 (146)	5.06 (129)	2.12 (54)	8.00 (203)	14.88 (378)	5.45 (138)	10.94 (278)	25.81 (656)	3.00 (76)	(8) - 3/4"-10
VkUx-62xx-251-L-17	8"	7.75 (197)	6.05 (154)	2.50 (64)	9.50 (241)	16.38 (416)	5.45 (138)	10.94 (278)	25.81 (656)	3.00 (76)	(8) - 3/4"-10

a. For Positive Positioner substitute 4 for x in the first field of the part number. (VKF**4**-62xx-221-L-11)

8 TO 10" TWO-WAY BUTTERFLY VALVE ASSEMBLIES WITH DUAL PNEUMATIC ACTUATOR VALVE DIMENSIONS

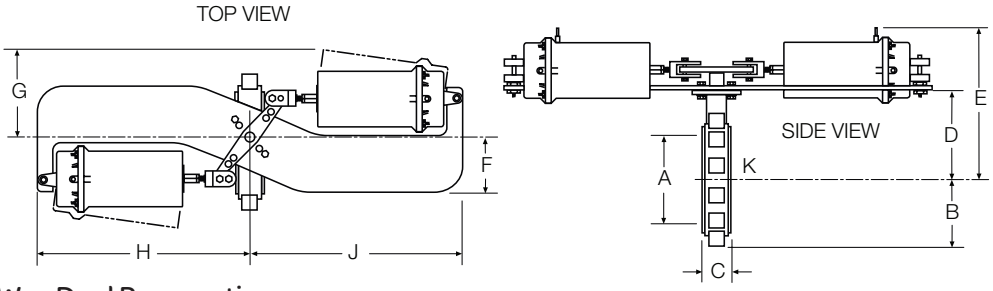

Table 34: Two-Way Dual Pneumatic

Valve Assembly Part Number[a]	Valve Size In	Dimensions in inches (millimetres)									
		A	B	C	D	E	F	G	H	J	K Lug Bolt Threads
VkFx-62xx-251D-L-17	8"	7.75 (197)	6.05 (154)	2.50 (64)	9.50 (241)	16.38 (416)	6.00 (152)	10.94 (278)	22.75 (578)	22.75 (578)	(8) - 3/4"-10
VkUx-62xx-251D-L-18	10"	9.75 (248)	7.69 (195)	2.50 (64)	10.75 (273)	17.62 (448)	6.00 (152)	10.94 (278)	22.75 (578)	22.75 (578)	(12) - 7/8"-9

a. For Positive Positioner substitute 4 for x in the first field of the part number. (VKF4-62xx-251D-L-18)

2 TO 6" THREE-WAY BUTTERFLY VALVE ASSEMBLIES WITH SINGLE PNEUMATIC ACTUATOR VALVE DIMENSIONS

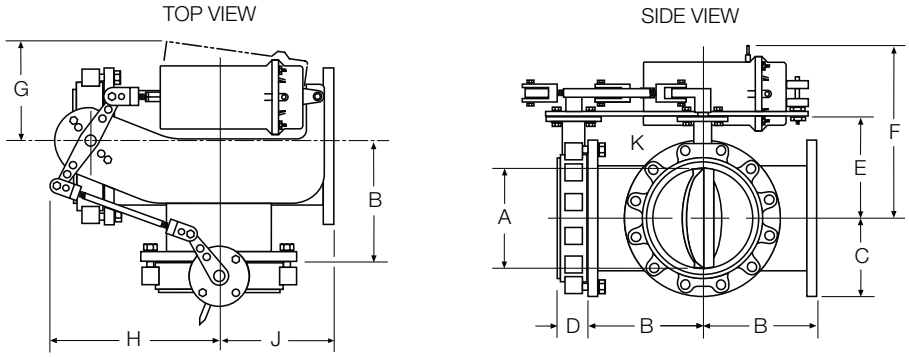

Table 35: Three-Way Single Pneumatic

Valve Assembly Part Number[a]	Valve Size In	Dimensions in inches (millimetres)									
		A	B	C	D	E	F	G	H	J	K Lug Bolt Threads
VKFx-63xx-221-L-11	2"	2.00 (51)	4.50 (114)	3.00 (76)	1.62 (41)	5.50 (140)	8.62 (219)	9.31 (237)	9.83 (250)	4.50 (114)	(4) - 5/8"-11
VKFx-63xx-221-L-12	2-1/2"	2.50 (64)	5.00 (127)	3.50 (89)	1.80 (46)	6 .00 (152)	9.12 (232)	9.31 (237)	10.40 (264)	5.00 (127)	(4) - 5/8"-11
VKFx-63xx-251-L-13	3"	3.00 (76)	5.50 (140)	3.80 (97)	1.80 (46)	6.25 (159)	9.38 (238)	10.94 (278)	10.90 (277)	5.50 (140)	(4) - 5/8"-11
VKFx-63xx-251-L-14	4"	4.00 (102)	6.50 (165)	4.50 (114)	2.00 (51)	7.00 (178)	13.75 (349)	10.94 (278)	12.02 (305)	6.50 (165)	(8) - 5/8"-11
VKUx-63xx-251-L-15 VKFx-63xx-251-L-15	5"	5.00 (127)	7.50 (191)	5.00 (127)	2.12 (54)	7.50 (191)	14.38 (365)	10.94 (278)	13.76 (350)	7.50 (191)	(8) - 3/4"-10
VKUx-63xx-251-L-16	6"	5.80 (147)	8.00 (203)	5.50 (140)	2.12 (54)	8.00 (203)	14.88 (378)	10.94 (278)	14.26 (362)	16.00 (406)	(8) - 3/4"-10

a. For Positive Positioner substitute 4 for x in the first field of the part number. (VKF**4**-63xx-221-L-11)

6 TO 8" THREE-WAY BUTTERFLY VALVE ASSEMBLIES WITH DUAL PNEUMATIC ACTUATOR VALVE DIMENSIONS

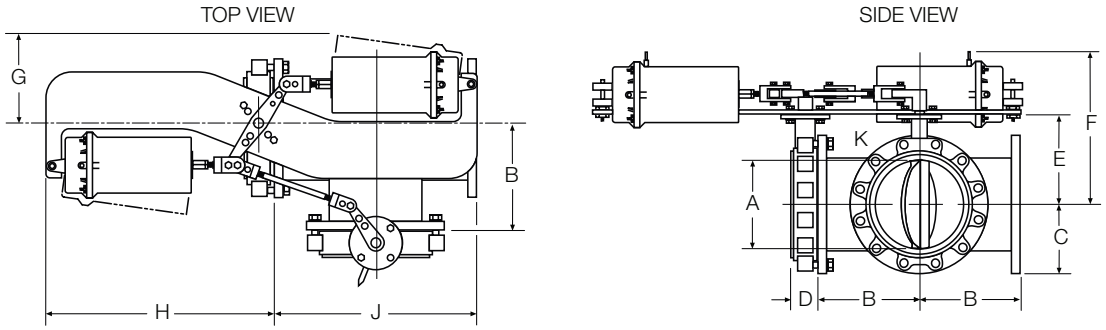

Table 36: Three-Way Dual Pneumatic

Valve Assembly Part Number[a]	Valve Size In	Dimensions in inches (millimetres)									
		A	B	C	D	E	F	G	H	J	K Lug Bolt Threads
VKFx-63xx-251D-L-16	6"	5.80 (147)	8.00 (203)	5.50 (140)	2.12 (54)	8.00 (203)	14.88 (378)	10.94 (278)	23.81 (605)	16.00 (406)	(8) - 3/4"-10
VKUx-63xx-251D-L-17	8"	7.80 (198)	9.00 (229)	6.75 (172)	2.50 (64)	9.50 (241)	16.38 (416)	10.94 (278)	24.00 (610)	18.00 (457)	(8) - 3/4"-10

a. For Positive Positioner substitute 4 for x in the first field of the part number. (VKF**4**-63xx-251D-L-16)

Product names, logos, brands, and other trademarks featured or referred to within this document are the property of their respective trademark holders.

© 2014 Schneider Electric. All rights reserved.